General technical data

1. BASIC CONSTRUCTION

Structure of an electrolytic aluminum capacitor is shown hereunder:

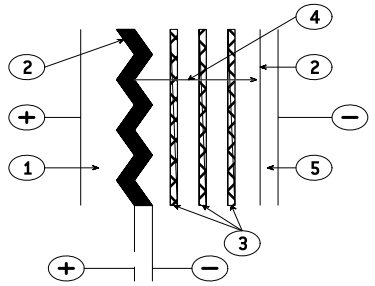

1. Anode: aluminum foil
2. Dielectric: aluminum oxide
3. Papers spacers impregnated with electrolyte
4. Ionic conduction assumed by electrolyte
5. Cathode: aluminum foil

The positive plate is an etched aluminum foil covered with alumina which is the dielectric of the capacitor.

The negative plate is constituted by a second aluminum foil which serves as a current supply, and by electrolyte-impregnated papers layers.

The metal used for anode is a ≥ 99,98 % grade aluminum.

The dielectric has a thickness of 13 Å / V.

The aluminum used for the cathode is a ≥ 98 % grade aluminum covered with a dielectric layer with a thickness of about 40 Å.

2. DIAGRAM OF THE EQUIVALENT CIRCUIT

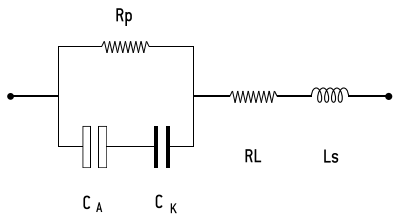

CA = Capacitance of the anode
CK = Capacitance of the cathode
Rp = Parallel resistance due to the aluminum oxide f llms.
RL = Series resistance of connections, plates and impregnated spacer.
Ls = Inductance of winding and connections.

A standard simplified diagram is.

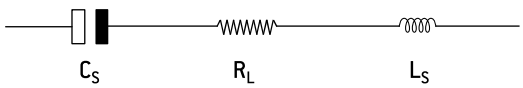

Cs is the series capacitance of both anode and cathode capacitances. Electrolytic aluminum capacitors are naturally polarized because of the insulating f llm on the anode. Given the very thin aluminum oxide layer, a reversed voltage should not exceed 1.5 V when there is energy supply.

Short duration reverse voltages can be absorbed by special construction, second anode replacing the former cathode.

3. CAPACITORS MARKING

3.1. ARTICLE CODE (ON EACH PACKAGING)

A followed by 6 figures number. First 3 positions are specific of the range. (Ex. A 745xxx for a FELSIC 85 BD)

140	FELSIC in bank
701	PRORELSIC 125
703	PRORELSIC 125
704	SNAPSIC
705	SNAPSIC 105
706	FELSIC HP BC – BD
708	PRORELSIC 145
710	CUBISIC
711	PROMISIC 031
712	CUBISIC LP
713	SNAPSIC 105 LP
714	SNAPSIC 4P
715	SNAPSIC 105 4P
716	SNAPSIC HV
717	SNAPSIC HC
718	SNAPSIC 125
721	RELSIC 033
722	CI FRS
723	CI FRS
728	FELSIC 039 (ex 727)
	FELSIC DI
738	FELSIC 037 (ex 737)
740	FELSIC 125 FRS BC
	(ex 731)
741	FELSIC 125 FRS BD
	(ex 731)
742	PRORELSIC 105 TFRS
743	PRORELSIC 105 TFRS
744	FELSIC 85 BC
	FELSIC 85 LP
745	FELSIC 85 BD
746	FELSIC 85 M BC
747	FELSIC 85 M BD
748	SICAL CO 42 - SICAL
749	SICAL CO 42 - SICAL
750	CUBISIC 125
756	FELSIC 105 BC
	FELSIC 105 LP
757	FELSIC 105 BD
760	FELSIC HC BC
761	FELSIC HC BD
762	FELSIC 105 TFRS BC
763	FELSIC 105 TFRS BD
764	FELSIC HV BC
765	FELSIC HV BD
775	VACSIC
774	VACSIC 150
776	ALSIC 20G
	ALSIC 145 20G

In FELSIC ranges, article code without first letter A, is printed on each capacitor.
a Figure 9 in fourth position shows a special product.

3.2. BATCH (ON EACH CAPACITOR).

3 figures or 6 figures

3.3. DATE (ON EACH CAPACITOR IF APPLICABLE)

4 figures (year-week)

4. ELECTRICAL CHARACTERISTICS

4.1. RATED CAPACITANCE C_R

The rated capacitance is defined at 100 Hz and at ambient temperature.

4.2. RATED VOLTAGE U_R

U_R is the maximum DC voltage which may be applied in continuous operation.
When applying a superimposed alternating voltage, the peak value of the resulting waveform should not exceed the rated voltage.

4.3. PEAK VOLTAGE U_P

Up is the maximum repetitive voltage which can be applied within short periods.
Defined in CECC 30 300 and IEC 60 384-4:

1000 cycles of 30 s charge followed by a no load period of 5 min. 30 s with upper category temperature.

$Up \leq 1{,}15\ U_R\ (U_R \leq 315\ V)$
$Up \leq 1{,}10\ U_R\ (U_R > 315\ V)$

General technical data

4.4. DISSIPATION FACTOR TANδ

The dissipation or loss factor is defined by its tangent Tanδ

$$Tg\delta = Rs \; Cs\,\omega$$
$$(\omega = 2\pi F)$$

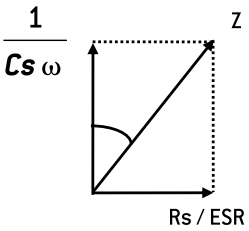

ESR Capacitor Equivalent Series Resistance
Cs Capacitor capacitance
F Frequency (100 Hz)
Z Capacitor impedance

4.5. EQUIVALENT SERIES RESISTANCE ESR

The relation between ESR and dissipation factor Tanδ is given in § 4.4.

4.6. IMPEDANCE Z - INDUCTANCE L

The impedance is given by:

$$Z = \sqrt{R^2 + \left(L\omega - \frac{1}{C\omega}\right)^2}$$

L inductance. Generally L = 5 to 20 nH

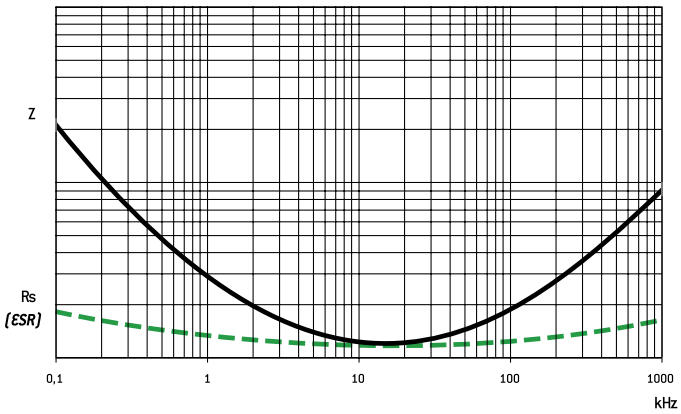

Z and ESR as function of frequency typically follows the chart:

4.7. PERMISSIBLE RIPPLE CURRENT (I r.m.s.) I~

The current is defined at the maximum climatic category and at 100 Hz. It is the root mean square value r.m.s. The value I_0 is the rated value for calculations of expected life up to3 I_0.

4.8. LEAKAGE CURRENT Il

Il is measured at 20°C after a 5 min. polarization under rated voltage.

For C_R in μF and U_R in V:
$Il \leq 0{,}01\, C_R\, U_R$ or 1 μA*
when $C_R\, U_R \leq 1000\,\mu C$
$Il \leq 0{,}006\, C_R\, U_R + 4\,\mu A$
when $C_R\, U_R > 1000\,\mu C$
For $U_R > 350\ V_{DC}$ it can be specified:
with K = 4, 6 or 8
or
$Il \leq 0{,}3\,(C_R\, U_R)^{0{,}7} + 4\,\mu A$ (CECC 30 300)
* Whichever is the greater

4.9. CHARACTERISTICS

Versus temperature (typical values).

4.9.1. Capacitance drift

Versus temperature

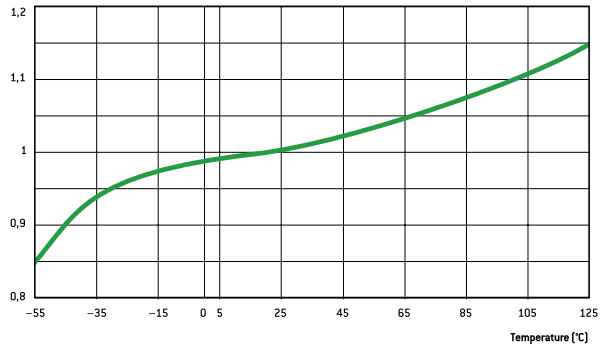

4.9.2. ESR and Z drifts at 100 Hz

Versus temperature

4.9.3 Leakage current drift

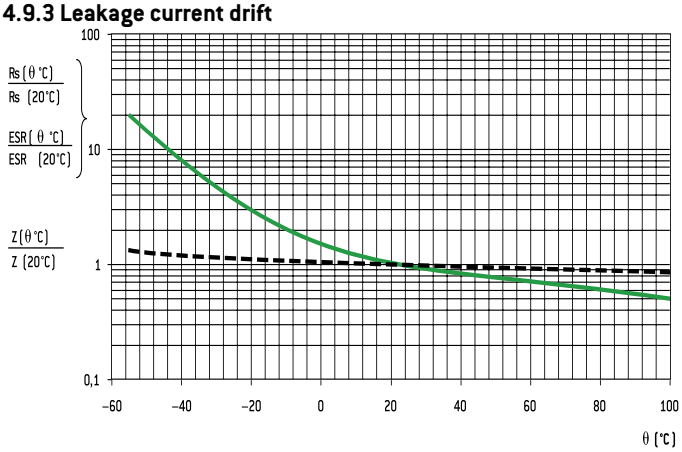

Versus temperature

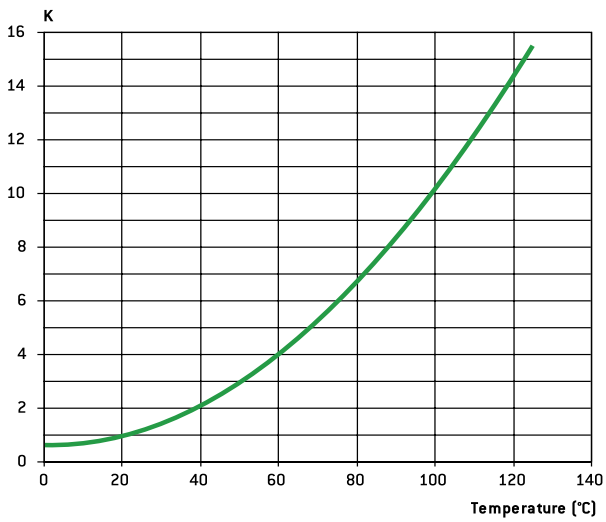

General technical data

5. SPECIFICATION TO APPLY

Electrolytic aluminum capacitors are defined in:

- NF and UTE French national standard
- CECC European specifications
- IEC international specifications

Quality insurance procedures are described in these specifications.

	French	European	International
Generic specification Fixed capacitors	NF C 83 100	CECC 30 000 EN 130 000	IEC 60 384 -1 QC 300 000
Sectional specification Electrolytic aluminum capacitors	NF C 83 110	CECC 30 300	IEC 60 384 - 4 C 300 300
Blank deta II specification - Electrolytic aluminum capacitors with non solid electrolyte.	UTE 83 110	CECC 30 301	IEC 60 384 - 4 -1 QC 300 301
Blank deta II specifications	CECC 30 301- 017 to CECC 30 301- 062 CO 31 to CO 55	CECC 30 301- 017 to CECC 30 301- 062 CECC 30 301- 802 to CECC 30 301- 811	

6. ENDURANCE TESTS / LIFE TIME

6.1. STANDARD ENDURANCE TEST

at max category temperature:

Temperature	Endurance test			
	Grade I - Long life			Grade II - General purpose
	10 000 h	5 000 h	2 000 h	1 000 h
125°C			•	
105°C		•	•	•
85°C	•	•	•	•

Standard endurance tests do not exceed 2000 hours at 125°C. However, present EXXELIA technologies concerning liquid electrolytes have led to endurance tests up to 5000 hours at 125°C (PRORELSIC 125 - FELSIC 125 RS) and even 20000 hours at 125°C (PRORELSIC 145 - ALSIC 145)

6.2. PERFORMANCE REQUIREMENTS ON STANDARD ENDURANCE TESTS.

Permissible capacitance drift ΔC/C (%)
Permissible increase factors on Tanδ, ESR, Z and II initial values

U_R	Endurance test			
	Grade I			Grade II
	10 000 h	5 000 h	2 000 h	1 000 h
6,3 V			+15 –30	+25 –40
10 V - 35 V	+15 –20	±15	±15	±30
40 V - 160 V	±15	±15	±15	±30
> 160 V	±15	±10	±10	±15

	Endurance test			
	Grade I			Grade II
	10 000 h	5 000 h	2 000 h	1 000 h
Tanδ or ESR (1)	1,5	1,3	1,3	1,5
Z (2)	3	2	2	3
II	Standard values			

(1) Tanδ or ESR: for initial value, take standard value.
(2) Z: for initial value, take specified value (see data sheet).

Specific requirements can be taken into consideration with regards to initial values of dissipation factor or equivalent series resistance and impedance.

6.3. FAILURE CRITERIA FOR ELECTROLYTIC CAPACITORS.

Failure criteria are defined in CECC 30 301

- Non measurable defaults leading to complete failure.
- Measurable defaults leading to adjustment losses of the load circuit (failure due to variations).

6.3.1. Non measurable defaults.

They might be summed up as:

- Open circuit
- Short circuit
- Operation of pressure relief device
- Severely damaged insulation
- Unusable terminations

6.3.2. Measurable defaults.

Variations exceeding the values given below characterize a default.

- Capacitance drift ΔC/C (%): 3 times the limit for standard endurance testing or 50 % (whichever is the smallest).
- Tanδ or ESR: 3 times standard max initial values.
- Z: 3 times standard max initial values.
- II: initial limit (under load conditions).

Specific requirements can be taken into consideration with regards to lower drifts.

6.4. INFLUENCE OF MAIN PARAMETER ON OPERATIONAL LIFE.

6.4.1. Temperature.

The capacitors operational life is highly dependent upon its internal temperature Θi and therefore upon the ambient temperature and the ripple current.

Knowing ESR and dissipated power values (§ 6.4.3.) one can figure out, the internal temperature rise and then determine the capacitors expected life.

With present high boiling point electrolytes (§ 8.6)
Θi max = 125 to 185°C depending on styles.

6.4.2. Ripple current.

The ripple current flowing through the capacitor increase the internal temperature through power dissipation.

Standards define the permissible current at 100 Hz and generally consider a temperature rise of 5 to 10°C of max category temperature.

Current waveforms and frequencies make it difficult to clearly determine the capacitors internal temperature rise, which defines the operationally life.
Experiments confirm following relationship:

$$\Theta i = \Theta a + (\Theta c - \Theta a)\ K$$

Where:

- Θi = Internal hot spot temperature
- Θa = Ambient temperature
- Θc = Case temperature
- K = Parameter depending upon case diameter and cooling
  - $\emptyset \geq 51$ k = $2^{\pm 0,5}$
  - $\emptyset < 51$ k = $1,5^{\pm 0,5}$ (air cooling - 0,2 m/s)

General technical data

r.m.s. value according to current waveform.

Function	Mean value	R.m.s. value
	$A\,(t_0/T)$	$A\sqrt{t_0/T}$
	$A\,(t_1/T)$	$A\sqrt{2t_1/3T}$
	$A/2\,(t_0/T)$	$A\sqrt{t_0/3T}$

Function	Mean value	R.m.s. value
	$A/2$	$A\sqrt{3}$
	$2A/\pi\,(t_0/T)$	$A\sqrt{t_0/2T}$
	$A/2\,(t_0/T)$	$A\sqrt{t_0/3T}$

Function	Mean value	R.m.s. value
	$2A/\pi$	$A/\sqrt{2}$
	$A/2$	$A/\sqrt{3}$
	0	A

6.4.3. Dissipated power versus case dimension

For calculations of ripple currents, considering an internal temperature rise of 10°C

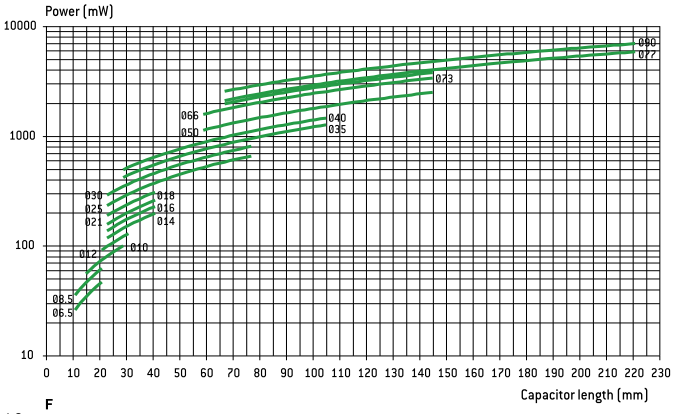

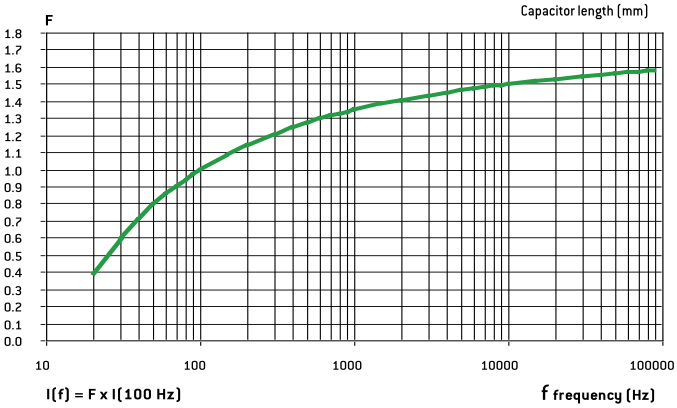

$P = ESR.I^2$

P = Dissipated power (mW)

($\Theta i - \Theta a = 10°C$)

ESR: Equivalent series resistance (100 Hz 20°C)

I: Ripple current (r.m.s. value at 100 Hz)

For different frequencies from 100 Hz, I must be multiplied by the factor F, according to above chart.:

6.4.4. Thermal resistance Rth and air cooling

Rth is static thermal resistance (without cooling) between capacitor central hot spot and ambient temperature measured at a distance of one capacitor diameter

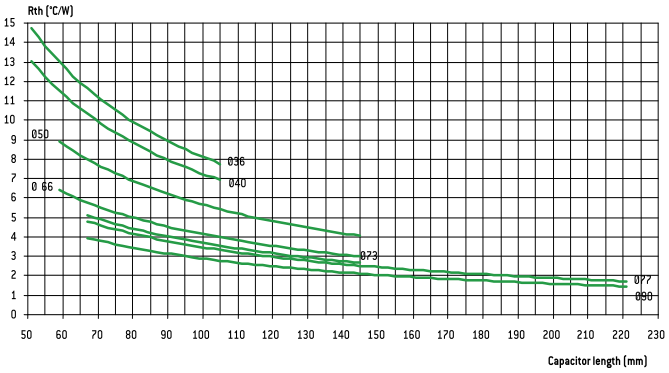

Forced or not cooling air can lead to a significant decrease of these values.

Consequently, r.m.s. ripple current can be increased as a function of air cooling speed:

Ø mm (inches)	≤ 0,5 m/s	1 m/s	2 m/s	3 m/s	≥ 4 m/s
66 - 90	I~	1,1 I~	1,2 I~	1,25 I~	1,3 I~
36 - 51	I~	1,2 I~	1,4 I~	1,45 I~	1,5 I~

This parameter shall be applied to one capacitor alone.

For capacitors in bank, ambient temperature must be strictly equal around all capacitors.

6.4.5. Quality guaranty

We guarantee products manufactured during 2 years from the data of shipment against defaults of material and assembly.

This guaranty can be involved by the buyer only if our products are used within normal conditions, always according to the state of the art and taking in account storage conditions.

The equipment design should take into consideration possible failures of our capacitors and related effects in order to avoid them.

Guaranty is not applicable for damages occurred by surge voltage, irregular use, polarity inversion or maintenance default.

Guaranty is exclusively limited to the replacement of individual defective capacitors within the terms of delivery. This rule applied to all cases and particularly to any further consequence of failures.

6.4.6. Reliability

Failure rate:

$$FR = \frac{\text{Number of components tested x test duration}}{\text{Number of failures}}$$

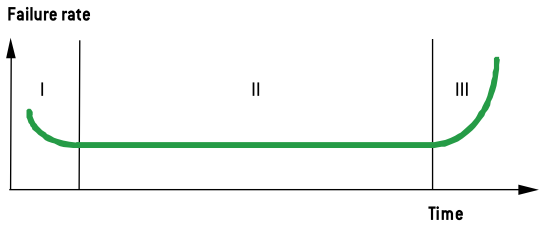

Failure rate is measured in FIT (failure in time = 10^{-9} / hour).

The failure rate is set up during the life time of the capacitor (phase II)

I. Early failure phase (generally excluded during ageing process).

II. Operational life time of the capacitors

III. End of life

General technical data

Mean time between failures MTBF = 1/FR mesured in years

Range	Failure rate for a failure percentage not exceeding 1% with a confidence level of 60 %
FELSIC 85 >350 V FELSIC HC > 350 V SNAPSIC - SNAPSIC HC > 350 V SNAPSIC 4P > 350 V PROMISIC 031 Ø = 6,5 SICAL CO 42 - SICAL > 350 V	50 FIT - (MTBF = 2280)
FELSIC 037 - 039 FELSIC 85 ≤ 350 V FELSIC HC ≤ 350 V CUBISIC CI FRS SNAPSIC 105 - SNAPSIC 105 4P SNAPSIC 105 LP - SNAPSIC HV SNAPSIC - SNAPSIC 4P ≤ 350 V SNAPSIC HC ≤ 350 V ALSIC IR - ALSIC 145 - ALSIC HV - VACSIC 150 - VACSIC SICAL CO 42 - SICAL ≤ 350 V PRORELSIC 125 Ø = 6,5 RELSIC 033 PROMISIC 031 Ø > 6,5	25 FIT - (MTBF = 4560)
FELSIC 125 FRS - SNAPSIC 125 FELSIC HV - FELSIC 105	10 FIT - (MTBF = 11410)
PRORELSIC 125 Ø > 6,5 PRORELSIC 145	5 FIT - (MTBF = 22820)

Multiplying factor of FR with voltage and temperature

	Temperature (°C)							
	≤ 40	50	60	70	85	105 (1)	125 (1)	145 (1)
Factor	1	1,5	2,3	3,4	6,3	14	32	72

(1) Only for permitted capacitors

	Percentage of rated voltage (2)		
	100 %	80 %	50 %
Factor	1	0,8	0,5

(2) This voltage has to be constant

Environ-ment	Without vibration		Ground with vibrations or mob lle			
	Ground, fix Controlled air	Ground, fix	PRORELSIC SNAPSIC 20 g FELSIC 20 g	FELSIC 10 g PROMISIC SICAL Ø ≤14	CI FRS - SNAPSIC RELSIC SICAL Ø >14	ALSIC
Factor	1	2	2	4	6	12

7. MANUFACTURING FLOW CHART

Process controls

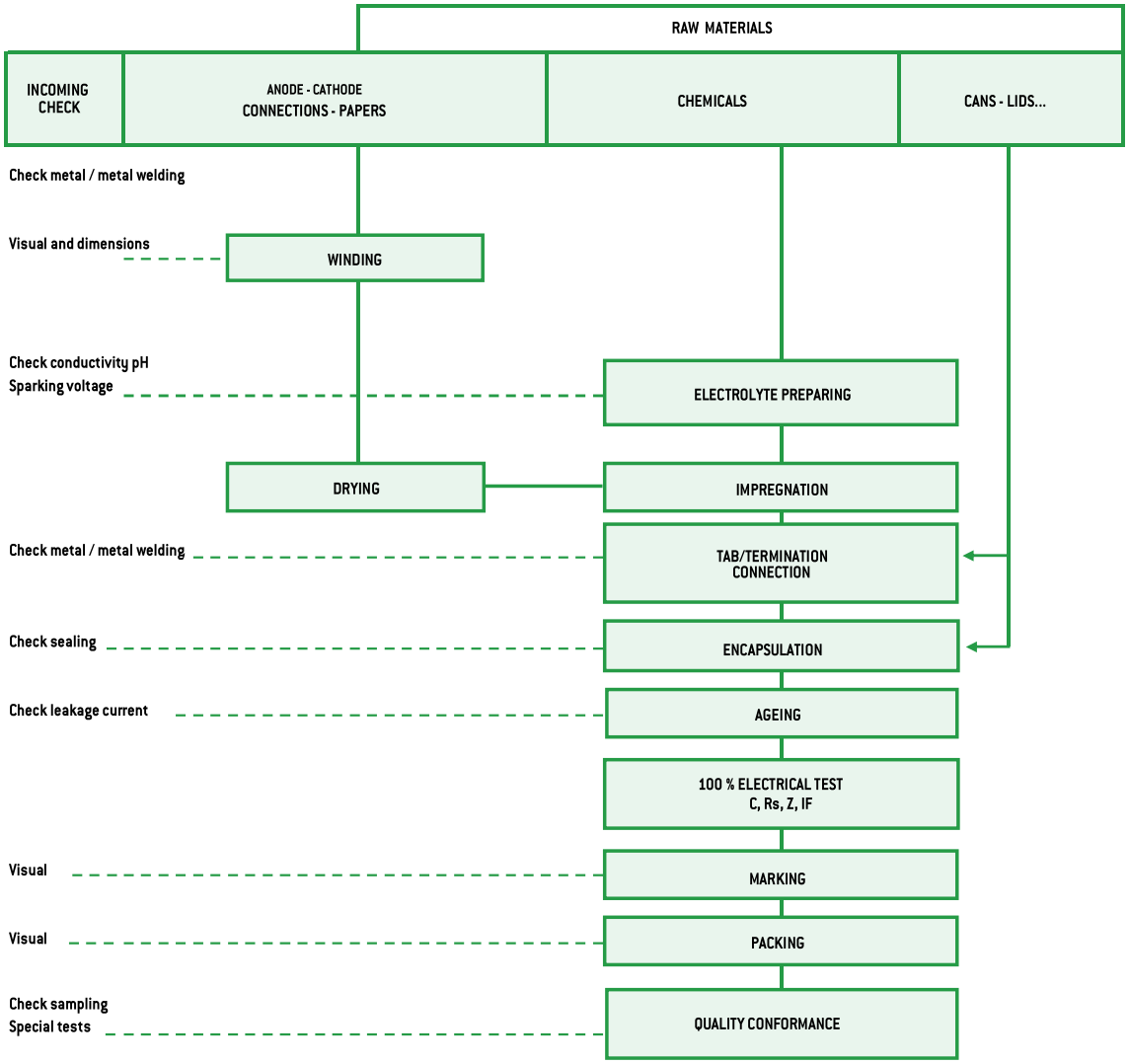

General technical data

8. INFORMATION ON APPLICATION

8.1. CLEANING SOLVENTS

Use aliphatic alcohols, such as denatured ethyl alcohol, isopropanol, or butylacetate, or else alkaline d lluted solutions. Avoid incompatible solvents (halogenous for example).

8.2. SHELF LIFE

There is no electrical characteristics variation for long periods of storage except leakage current which can increase.

It is caused by chemical reactions between the dielectric alumina and the electrolyte. These reactions are reversible when switched on. Capacitors can generally be stored at temperature between –5° and +50°C without reforming for the following periods of time:

- For $U_R \leq 100$ V, storage time: .....5 years (up to 10 years under specific conditions)
- For 100 V < $U_R \leq 360$ V storage time: .....3 years
- For 360 V < U_R < 500 V storage time: .....1 year
- For $U_R \leq 500$ V, storage time: ..... 6 months

Generally when these periods are overstepped, one hour at rated voltage causes the decrease of leakage current under the specified limits. An other way to avoid this leakage current increase problem is to always limit ava llable power through capacitor during first seconds or minutes after storage or transport, according to the following chart:

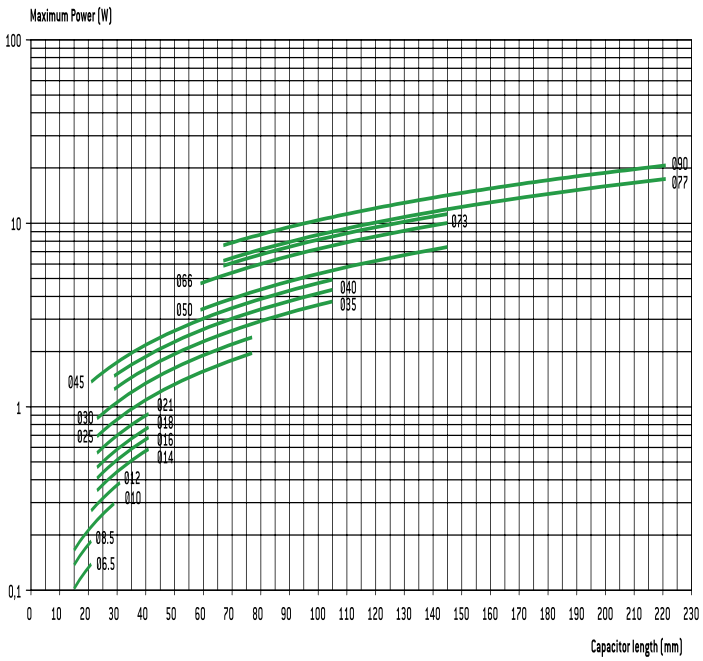

8.3. LOW PRESSURE RESISTANCE

EXXELIA capacitors can be used with ambient low pressure decreasing up to 10 mbar (altitude 28000 m – 92000 feet).

8.4. MOUNTING SCREW TERMINALS CAPACITORS (FELSIC)

Capacitors may be used vertically (terminals on top) or horizontally. When used horizontally, the following position in relation to the safety vent, is recommended:

Mounting capacitors in series may be used for operating voltage exceeding U_R. See FELSIC in bank.

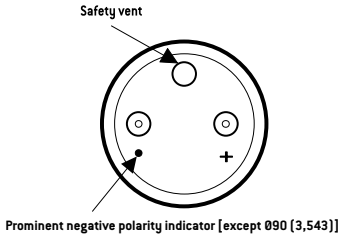

8.5. MOUNTING SOLDER TYPE CAPACITORS.

They may be used in any position. During mounting, avoid applying excessive force to capacitor pins or wires. There is a risk of damaging internal connections.
After soldering and for the same reasons, do not try to move the capacitor's body.

8.6. ELECTROLYTES: SAFETY RULES.

Electrolytes used in EXXELIA capacitors are manufactured by EXXELIA. Main solvents are generally γ butyrolactone and ethylene glycol, very stable high boiling point solvents. Ionic conductive salts in electrolyte induce a very weak acidity (pH 5 to 7).

8.7. ENVIRONMENT.

In aluminium capacitors with liquid electrolyte there is no component showing a pollution risk, in small amounts, of air or water. EXXELIA is always involved in this security field particularly in using chemicals for electrolyte, without well-known risks.

- Dimethylformamide (DMF) dangerous solvent forbidden in several uses is completely excluded by EXXELIA,since 1990.
- There is no halogen compound such as chlorofluorocarbon (CFC or FCKW in german) or polychlorobiphenyl (PCBPyralene) or pentabromodiphenylether or octabromodiphenylether.

There is neither benzene, toluene or phenyl compound nor explosive such as picric acid, nor asbestos in plastic covers. All the capacitors made by EXXELIA since 1991, can be scrapped or used in raw materials recycling processes without special care in compliance with Community rules.

EXXELIA aluminium capacitors with non-solid electrolyte are particularly suitable for different kinds of environment taking in account severity increasing laws.

European directives 2003/11/EC, 2002/96/EC (WEEE) and 2002/95/EC (RoHS) applies to all EXXELIA capacitors including every solder type, manufactured with pure tin coated pins or wires, since at least January 2006.

Mounting and insulating parts

STUD FIXING: FELSIC BD

Steel nut, spring washer and insulating washer are delivered loosely with the capacitor.

STANDARD MOUNTING WITH:

Insulating washer and steel nut

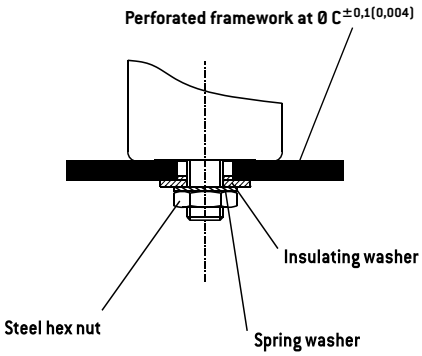

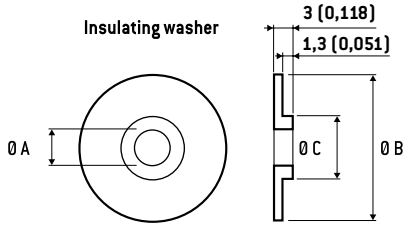

Ø Capacitor	DIMENSIONS in mm (inches)				
	M	Ø A	Ø B	Ø C	Code
36	8	8,4	25	18,5	A 691060
51 - 77	12	12,5	30	21,5	A 691061
90	12	12,5	35	21,5	A 691062

Insulating plastic nut with or without insulating washer

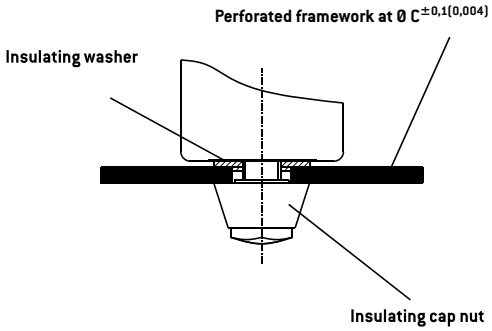

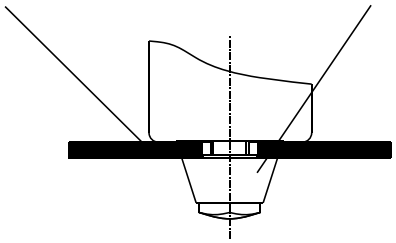

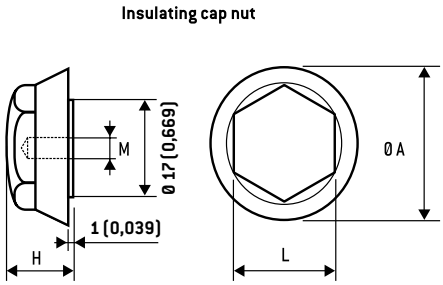

DIMENSIONS in mm (inches)									
M		Ø A		H		L		Max. torque	Code
8	(0,315)	25	(0,984)	15	(0,591)	17	(0,669)	3 Nm	A 691070
12	(0,472)	30	(1,181)	20	(0,787)	19	(0,748)	7 Nm	A 691071

Ring - clip mounting: FELSIC LP

Ring clips shall be ordered separately.
Tightening screws and nuts are supplied loosely.

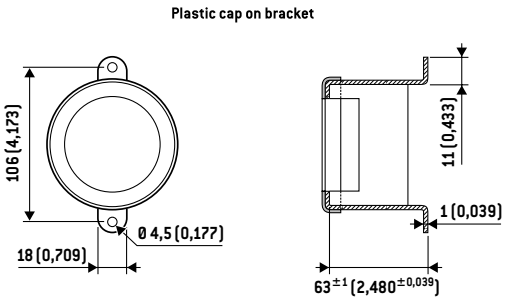

FELSIC 85 LP FELSIC 105 LP	Code
Metal bracket	A691055
Plastic cap	A691065

General technical data

Ring - clip mounting: FELSIC BC
Ring clips shall be ordered separately.
Tightening screws and nuts are supplied loosely.

FELSIC BC - Metal ring-clips

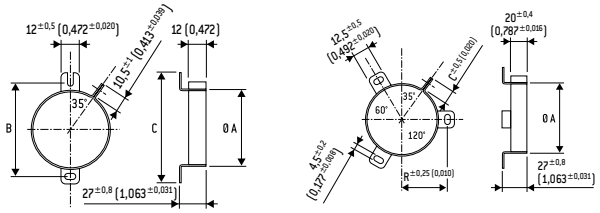

Ø A Cap.	B	C	Code
36 (1,417)	54 (2,126)	63 (2,480)	A 691901

Ø A Cap.	B	C	Code
51 (2,008)	33,5 (1,319)	11,8 (0,465)	A 691905
66 (2,598)	39 (1,535)	10,5 (0,413)	A 691913
73 (2,874)	44 (1,732)	10,5 (0,413)	A 691914
77 (3,031)	44,5 (1,752)	10,5 (0,413)	A 691907
90 (3,543)	53,3 (2,098)	11,8 (0,465)	A 691915

Stirrup mounting: CUBISIC LP
Stirrups shall be ordered separately.
Tightening screws and nuts are supplied loosely
Salt mist endurance of screws and mounting accessories:
minimum 96 h (IEC 600 68-2-11)

CUBISIC /CUBISIC LP - Metal bracket

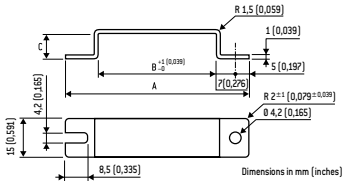

Ø A Cap.	A	B	C	Code
45x12 (1,772x 0,472)	69 (2,717)	45 (1,772)	10 (0,394)	A 691057
35x16 (1,378x 0,630)	59 (2,323)	35 (1,378)	14 (0,551)	A 691059

PACKAGING

1. PACKAGING AND WEIGHT UNITS.

1.1. Capacitor with screw terminals

Can DIMENSIONS in mm (inches)				Unit weight *
Ø	H			(g)
36 (1,417)	47 (1,850)	52 (2,047)	53 (2,087)	70
36 (1,417)	60 (2,362)			79
36 (1,417)	80 (3,150)	81 (3,189)		100
36 (1,417)	104 (4,094)	105 (4,134)		120
51 (2,008)	47 (1,850)			80
51 (2,008)	62 (2,441)	63 (2,480)		105
51 (2,008)	81 (3,189)	82 (3,228)		190
51 (2,008)	104 (4,094)	105 (4,134)		260
51 (2,008)	112 (4,409)			270
51 (2,008)	144 (5,669)			370
66 (2,598)	104 (4,094)	105 (4,134)		430
66 (2,598)	112 (4,409)			460
73 (2,874)	104 (4,094)	112 (4,409)		600
73 (2,874)	144 (5,669)			680
77 (3,031)	104 (4,094)	105 (4,134)		620
77 (3,031)	144 (5,669)	145 (5,709)		860
77 (3,031)	200 (7,874)			1300
77 (3,031)	220 (7,874)	221 (8,701)		1400
90 (3,543)	67 (2,638)			600
90 (3,543)	144 (5,669)	145 (5,709)		1400
90 (3,543)	200 (7,874)			1800

* Unit weight = typical values
Possible variations of = ± 25 % according to different voltage and capacitance.

1.2. Radial solder types

Can dimensions mm (inches)		ALSIC	SNAP-SIC
Ø	H	Weight* (g)	
10 (0,394)	16 (0,630)	1,8	-
12,5 (0,492)	21 (0,827)	4,5	-
12,5 (0,492)	24 (0,945)	5	
16 (0,630)	25 (0,984)	8,2	-
22 (0,866)	25 (0,984)	-	15
22 (0,866)	30 (1,181)	-	17
22 (0,866)	40 (1,575)	-	18
25 (0,984)	25 (0,984)	-	17
25 (0,984)	30 (1,181)	-	20
25 (0,984)	35 (1,378)	-	22
25 (0,984)	40 (1,575)	-	25
25 (0,984)	45 (1,772)	-	28
25 (0,984)	50 (1,969)	-	30
30 (1,181)	25 (0,984)	-	28
30 (1,181)	30 (1,181)	-	30
30 (1,181)	35 (1,378)	-	30
30 (1,181)	40 (1,575)	-	40
30 (1,181)	45 (1,772)	-	45
30 (1,181)	50 (1,969)	-	50

Can dimensions		ALSIC	SNAP-SIC
Ø	H	Weight* (g)	
35 (1,378)	30 (1,181)	-	50
35 (1,378)	40 (1,575)	-	50
35 (1,378)	45 (1,772)	-	52
35 (1,378)	50 (1,969)	-	60
35 (1,378)	75 (2,953)	-	95
35 (1,378)	100 (3,937)	-	125
40 (1,575)	40 (1,575)	-	65
40 (1,575)	50 (1,969)	-	100
40 (1,575)	75 (2,953)	-	130
40 (1,575)	100 (3,937)	-	170
45 (1,772)	21 (0,827)	-	50
45 (1,772)	(0,984)	-	60
45 (1,772)	30 (1,181)	-	73
45 (1,772)	35 (1,378)	-	85
45 (1,772)	45 (1,772)	-	110
45 (1,772)	75 (2,953)	-	180
45 (1,772)	100 (3,937)	-	240

Can DIMENSIONS in mm (inches)			CUBISIC
l	L	H	weight (g)
35 (1,378)	35 (1,378)	16 (0,630)	30
35 (1,378)	50 (1,969)	16 (0,630)	40
45 (1,772)	35 (1,378)	12 (0,472)	30
45 (1,772)	50 (1,969)	12 (0,472)	45
45 (1,772)	75 (2,953)	12 (0,472)	60

* Unit weight = typical values
Possible variations of = ± 25 % according to different voltage and capacitance.

1.3. Axial types

Can DIMENSIONS in mm (inches)		PRORELSIC RELSIC	PRORELSIC PROMISIC	SICAL CO 42 SICAL
Ø	H	Unit weight * (g)	Unit weight * (g)	Unit weight * (g)
6,5 (0,256)	15 (0,591)	-	1,6	-
6,5 (0,256)	19 (0,748)	-	1,8	1,8
8,5 (0,335)	19 (0,748)	-	2,3	2,3
10 (0,394)	19 (0,748)	-	2,8	2,8
10 (0,394)	25 (0,984)	-	3,5	3,5
10 (0,394)	28 (1,102)	-	3,8	-
12 (0,472)	25 (0,984)	-	5	-
12 (0,472)	30 (1,181)	-	5,4	5,4
14 (0,551)	30 (1,181)	-	6,9	6,9
14 (0,551)	41 (1,614)	-	9,5	-
(0,630)	30 (1,181)	7,7	-	7,7
18 (0,709)	35 (1,378)	13,6	-	-
18 (0,709)	40 (1,575)	15,3	-	15,3
21 (0,827)	40 (1,575)	19,5	-	19,5
25 (0,984)	40 (1,575)	28	-	28
25 (0,984)	50 (1,969)	35	-	35
25 (0,984)	75 (2,953)	56	-	56

* Unit weight = typical values
Possible variations of = ± 25 % according to different voltage and capacitance.

General technical data

2. PACKAGING ON TAPE

2.1. Axial types

Dimensions and tolerance in accordance with IEC 60 286-

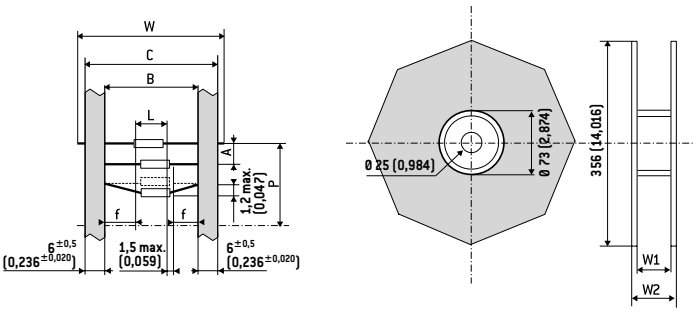

DIMENSIONS in mm (inches)									
D	L max.	B	A	P	C max.	W_1	W_2 max.	W	n [2]
6,5 (0,256) 8,5 (0,335) [1]	20 (0,787)	$73^{\pm 1,5}$ ($2,874^{\pm 0,059}$)	$10^{\pm 1,5}$ ($0,394^{\pm 0,059}$)	± 2 (0,079)	87,5 (3,445)	93 (3,661)	106 (3,661)	$85^{\pm 1,5}$ ($3,346^{\pm 0,059}$)	1000 (39,370) 750 (29,528)
10 (0,394) [1] 12 (0,472) [1] 14 (0,551) [1]	32 (1,260)	$73^{\pm 1,5}$ ($2,874^{\pm 0,059}$)	$15^{\pm 1,5}$ ($0,591^{\pm 0,059}$)	± 3 (0,118)	87,5 (3,445)	93 (3,661)	106 (3,661)	$85^{\pm 1,5}$ ($3,346^{\pm 0,059}$)	400 (15,748) 400 (15,748) 200 (7,874)

(1) On tape only on request
(2) n = number of capacitors per reel.

White positive tape ƒ: > 20 mm (0,787 inches)
P: 10 space

VACSIC 105

2 500 h / 105°C

10 V ... 350 V	15 µF ... 4 700 µF	Ø 12 (0,472) ... Ø 16 (0,630)	– 55°C + 105°C	Long life time

APPLICATIONS

- Coupling / decoupling
- Filtering
- Switch mode power supplies
- Circuits with time constant
- Circuits with impulse current

Insulating aluminum case
Axial tin coated copper leads
Welded chain providing perfect continuity of the circuit

Tolerance on capacitance at 20°C: ±20%
(on request) : –10/+50% or –10/30%
Operating temperature : – 55°C +105°C

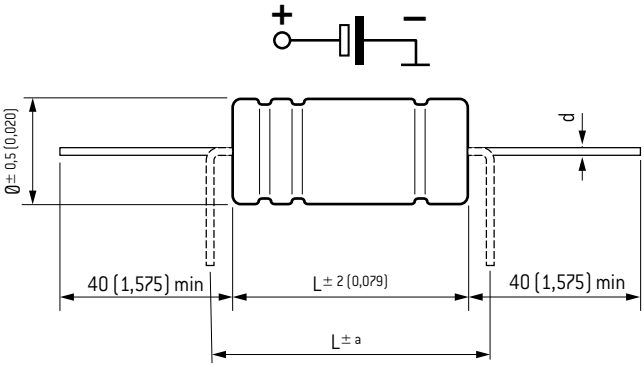

Dimensions in mm (inches)

DIMENSIONS in mm (inches)

Ø mm (inches)		d		a	
12 - 16	(0,472 - 0,630)	0,8	(0,031)	4	(0,157)

RESISTANCE TO VIBRATIONS

	Standard
ƒ (Hz)	10 - 2000 Hz
Amplitude	1,5 (0,059)
Acceleration	45 g
t (h)	3 x 2 h

SPECIFICATIONS

NFC 83 110 - Long life
DIN 41 240 - Climatic category GPF: –55°C + 105°C / 56 days
IEC 60 384.4 - Long life

WITHSTAND STRENGTH OF INSULATING SLEEVE

Insulation resistance at 20°C between leads and mounting hardware : 100 MΩ
Test voltage at 50 Hz 1 min. between terminals and mounting hardware : 1 000 V
Fire resistance : self extinguish 30 s (IEC 60 695-2-2) without PVC

VACSIC 105

2 500 h / 105°C

Capacitance (µF)	Dimensions Ø mm (inches)		Dimensions L mm (inches)		Tg δ 100 Hz +20°C max (%)	ESR 100 Hz +20°C Typic (Ω)	Z +20°C max. (Ω)	I. leak +20°C 5 min. max. (mA)	I ~ 100 Hz +105°C (A)	Code
Rated voltage: 10 V										
2200	12	(0,472)	30	(1,181)	17	0.061	0.062	135	1.42	A775000
3300	14	(0,551)	30	(1,181)	17	0.041	0.041	200	1.9	A775001
4700	16	(0,630)	30	(1,181)	17	0.029	0.029	280	2.4	A775002
Rated voltage: 16 V										
2200	12	(0,472)	30	(1,181)	15	0.054	0.055	210	1.52	A775020
3300	14	(0,551)	30	(1,181)	15	0.036	0.036	310	2.02	A775021
4700	16	(0,630)	30	(1,181)	15	0.025	0.025	450	2.6	A775022
Rated voltage: 25 V										
1000	12	(0,472)	30	(1,181)	10	0.080	0.081	150	1.25	A775040
2200	14	(0,551)	30	(1,181)	10	0.036	0.037	330	2	A775041
2700	16	(0,630)	30	(1,181)	10	0.029	0.030	405	2.4	A775042
Rated voltage: 40 V										
470	12	(0,472)	30	(1,181)	10	0.169	0.172	110	0.86	A775060
1000	14	(0,551)	30	(1,181)	10	0.080	0.081	240	1.35	A775061
1200	16	(0,630)	30	(1,181)	10	0.066	0.067	280	1.6	A775062
Rated voltage: 63 V										
330	12	(0,472)	30	(1,181)	8	0.193	0.199	120	0.8	A775080
600	14	(0,551)	30	(1,181)	8	0.106	0.109	220	1.18	A775081
800	16	(0,630)	30	(1,181)	8	0.080	0.082	300	1.5	A775082
Rated voltage: 100 V										
150	12	(0,472)	30	(1,181)	7	0.37	0.386	90	0.58	A775100
220	14	(0,551)	30	(1,181)	7	0.25	0.263	130	0.77	A775101
330	16	(0,630)	30	(1,181)	7	0.17	0.175	200	1	A775102
Rated voltage: 160 V										
33	12	(0,472)	30	(1,181)	7	1.69	1.755	30	0.27	A775120
68	14	(0,551)	30	(1,181)	7	0.82	0.852	65	0.42	A775121
75	16	(0,630)	30	(1,181)	7	0.74	0.772	72	0.5	A775122
Rated voltage: 250 V										
22	12	(0,472)	30	(1,181)	6	2.17	2.287	33	0.24	A775140
47	14	(0,551)	30	(1,181)	6	1.02	1.070	70	0.38	A775141
60	16	(0,630)	30	(1,181)	6	0.80	0.838	90	0.5	A775142
Rated voltage: 350 V										
15	12	(0,472)	30	(1,181)	6	3.18	3.355	30	0.2	A775160
22	14	(0,551)	30	(1,181)	6	2.17	2.287	46	0.26	A775161
33	16	(0,630)	30	(1,181)	6	1.45	1.525	69	0.3	A775162

VACSIC 105

2 500 h / 105°C

EXPECTED LIFE

as a function of temperature and ripple current

PERMISSIBLE RIPPLE CURRENT I (R.M.S. VALUE)

versus frequency ƒ:
I ~: permissible r.m.s. current at 100 Hz
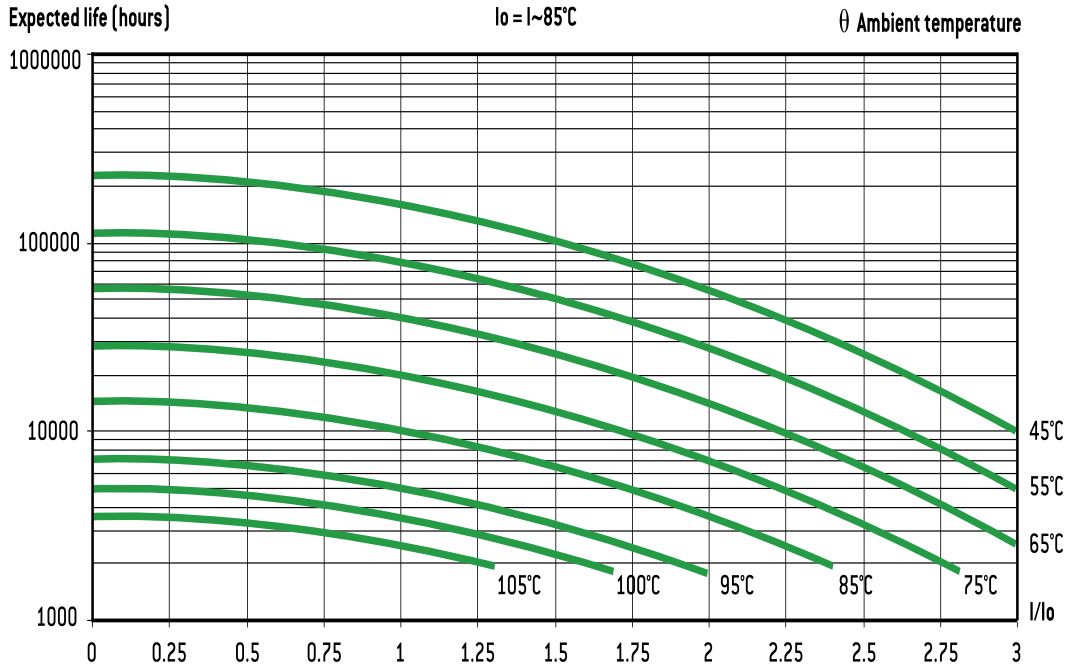
ƒ (Hz)	50	100	300	600	1 000	10 000	≥ 50 000
I	0,8 x I~	I~	1,2 x I~	1,3 x I~	1,35 x I~	1,5 x I~	1,6 x I~